DOOR PARTS

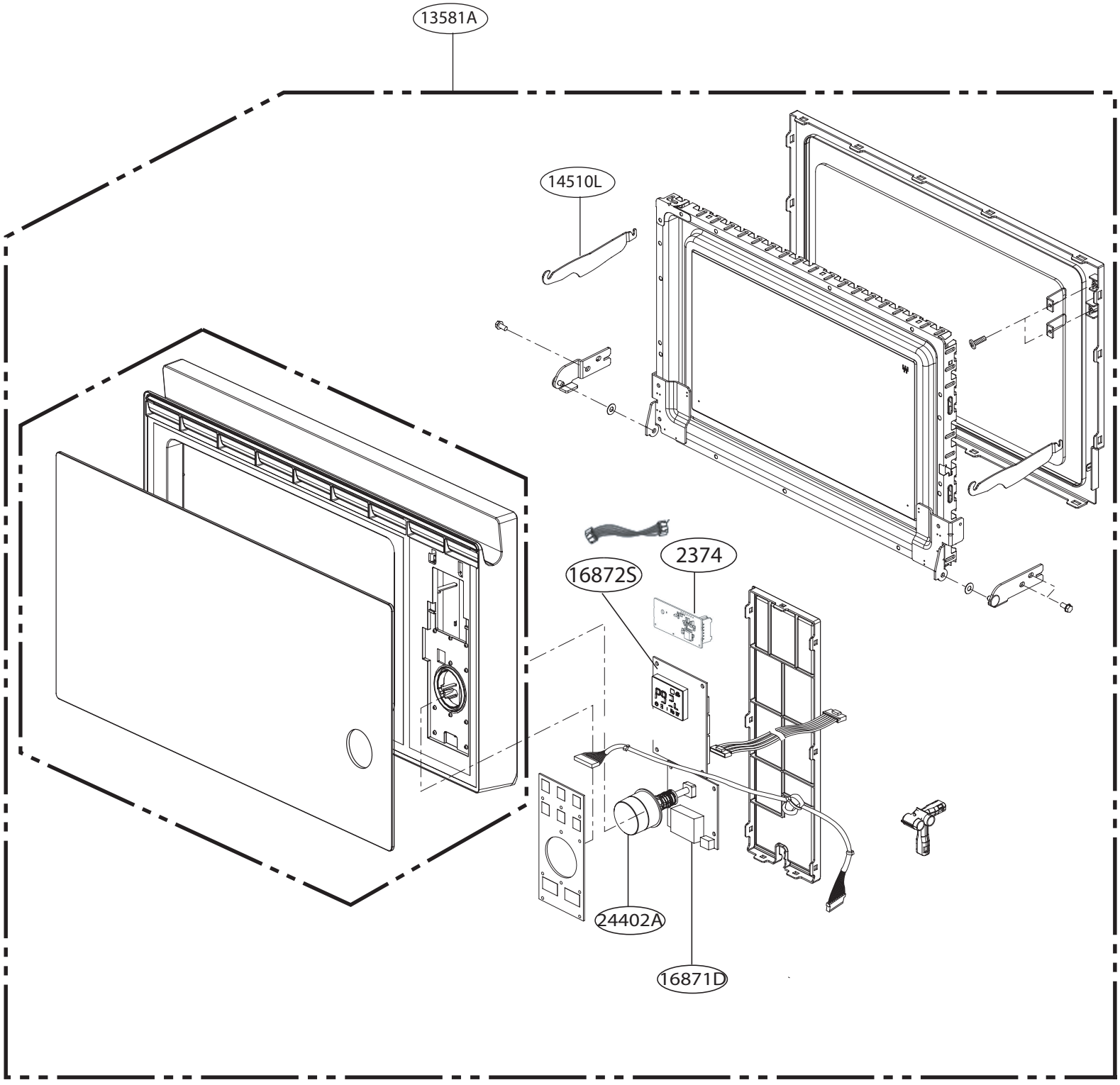

CONTROL PANEL PARTS

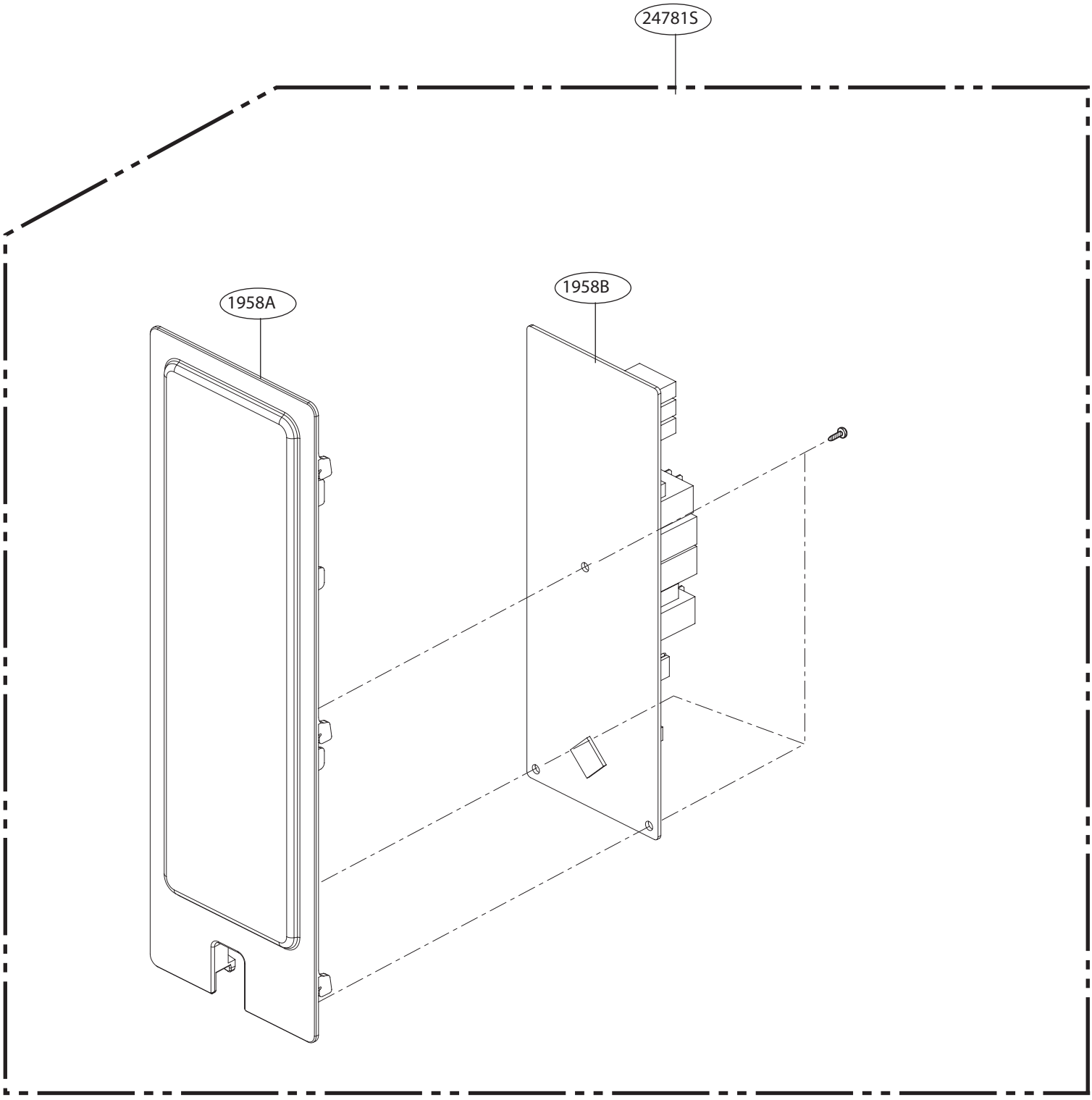

OVEN CAVITY PARTS

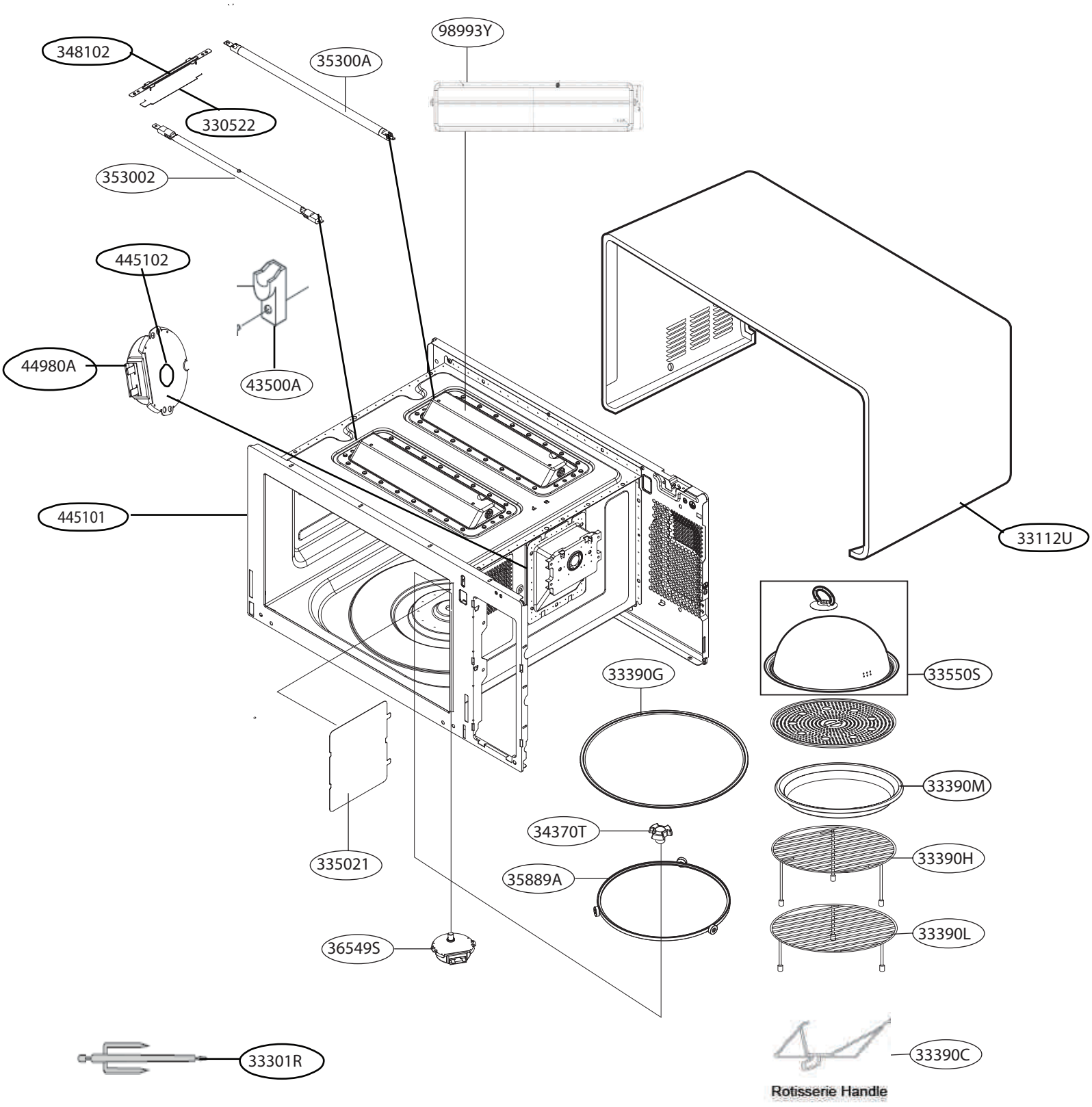

LATCH BOARD PARTS

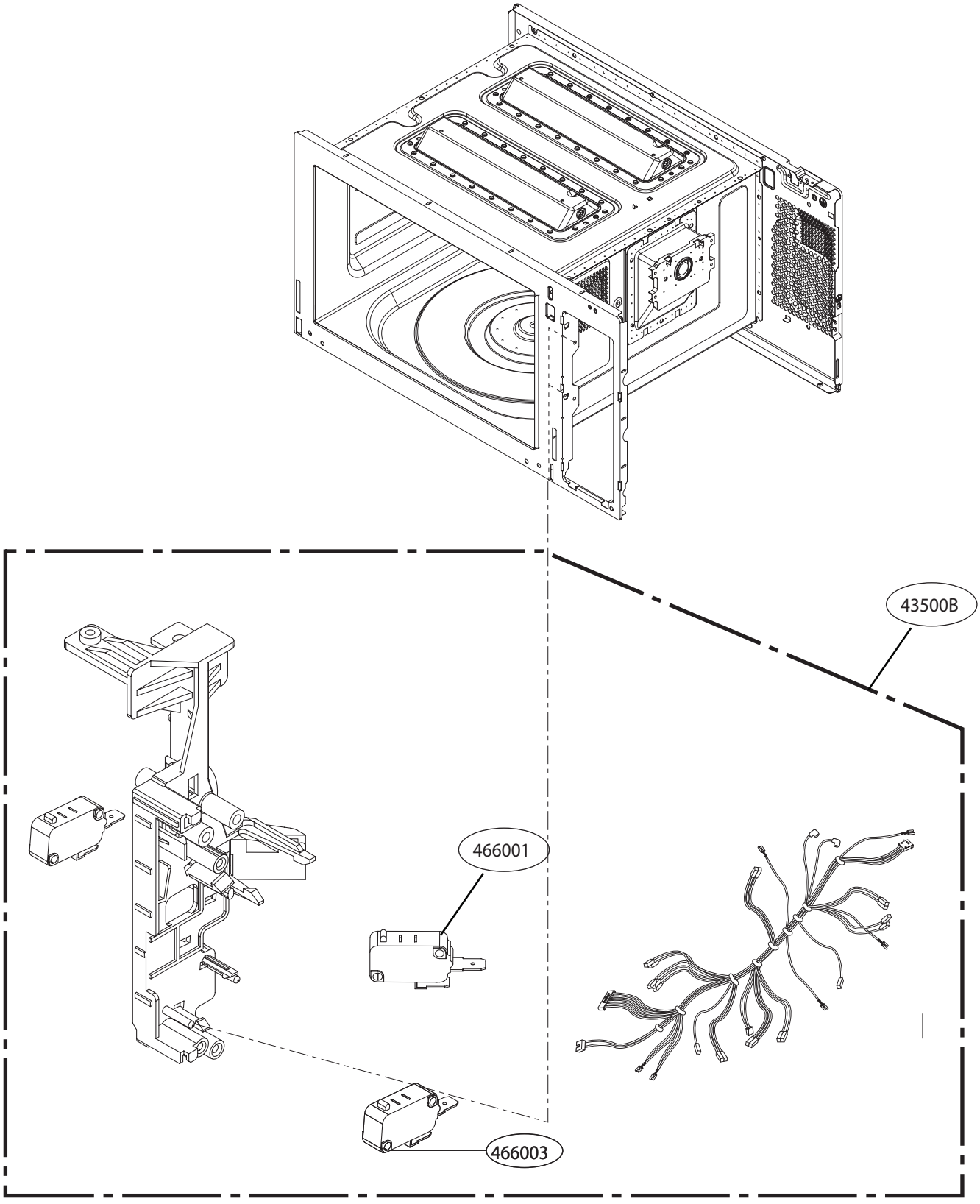

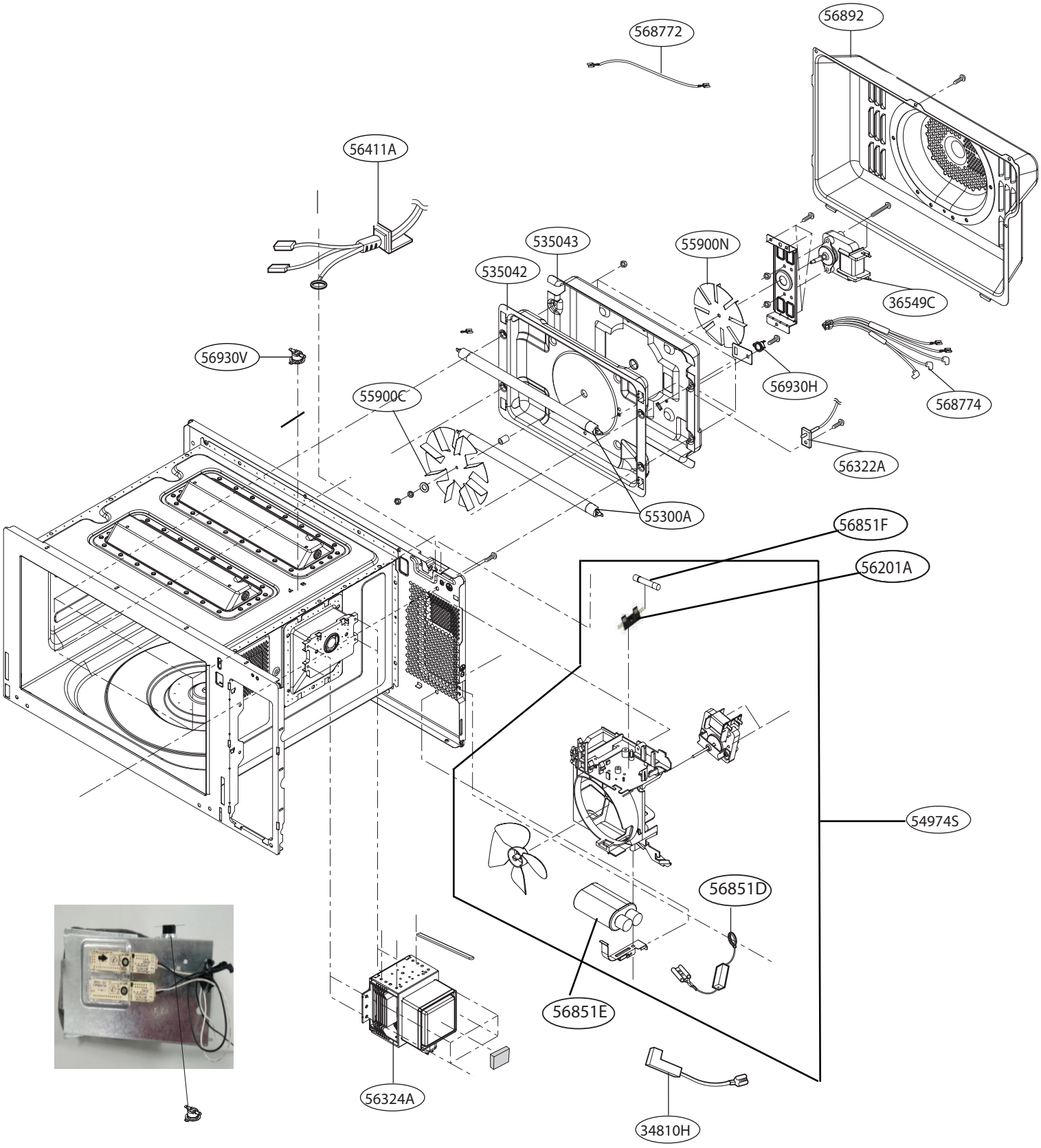
568772
56892
56411A
535043
55900N
535042
36549C
56930V
56930H
568774
55900C
56322A
55300A
56851F
56201A
54974S
56851D
56851E
56324A
34810H
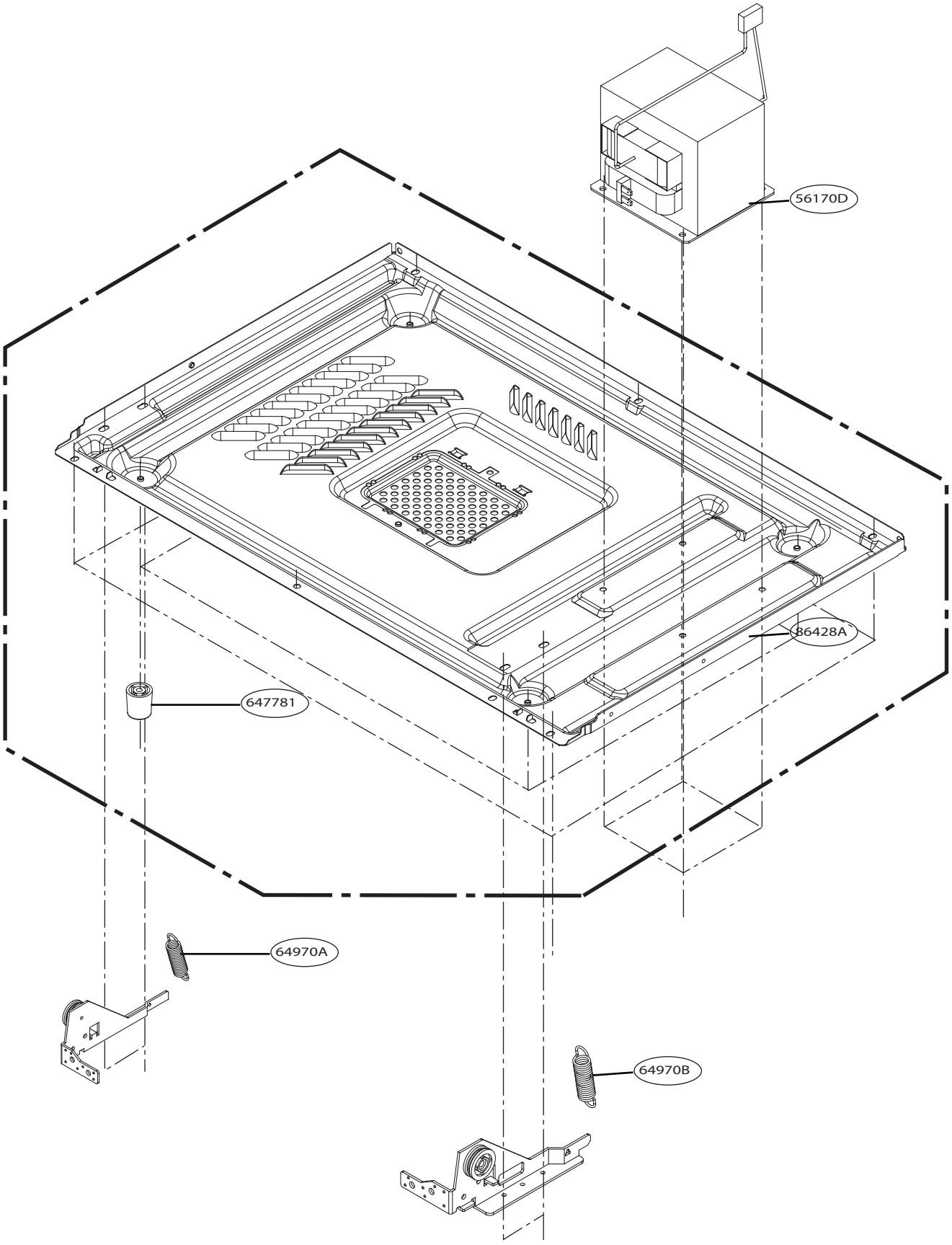
BASE PLATE PARTS